Pentair Water
Pool and Spa®

P/N 619751 - Rev C

Pentair Water
Pool and Spa®

IntelliBrite® Controller

(For IntelliBrite Pool, Spa and Landscape Lighting Fixtures)

Installation and User's Guide

IMPORTANT SAFETY INSTRUCTIONS
READ AND FOLLOW ALL INSTRUCTIONS
SAVE THESE INSTRUCTIONS

This product may be protected by the following U.S. patent and all corresponding foreign conterparts:

US Patents Pending.

© 2009 Pentair Water Pool and Spa, Inc. All rights reserved.

1620 Hawkins Ave., Sanford, NC 27330
(800) 831-7133 • (919) 566-8000
10951 West Los Angeles Ave., Moorpark, CA 93021
(800) 831-7133 • (805) 553-5000

IntelliBrite®, SAm®, IntelliTouch®, EasyTouch®, and Pentair Water Pool and Spa® are trademarks and/or registered trademarks of Pentair Water Pool and Spa, Inc. and/or its affiliated companies in the United States and/or other countries. Unless noted, names and brands of others that may be used in this document are not used to indicate an affiliation or endorsement between the proprietors of these names and brands and Pentair Water Pool and Spa, Inc. Those names and brands may be the trademarks or registered trademarks of those parties or others.

P/N 619751 Rev C. 07/30/2009

NOTES

WIRING INTELLIBRITE LANDSCAPE LED LIGHTS

Using the IntelliBrite Controller to control IntelliBrite landscape LED lights

Using an IntelliBrite® Controller (p/n 600054, sold separately) to operate the IntelliBrite® landscape LED lights makes it easy to dial in any of the various color light shows or fixed color. The controller's Hold and Recall buttons also allows you to create endless unique lighting effects. The IntelliBrite® Controller can control individual or multiple IntelliBrite® LED landscape lights. Multiple IntelliBrite® landscape lights can be connected via a junction box to the IntelliBrite® Controller so that all lights can be switched on and off together.

Maximum wattage when using multiple IntelliBrite LED lights with the IntelliBrite Controller

When using multiple IntelliBrite LED lights, the total allowable light wattage is **300 Watts maximum**. The following example combination of IntelliBrite LED lights can be connected to the IntelliBrite Controller:

- Two (2) IntelliBrite LED pool lights (each light 70 Watt maximum)
- One (1) IntelliBrite LED spa light (each light 40 Watt maximum)
- Six (6) IntelliBrite LED landscape lights (each light 20 Watt maximum)

Wiring the IntelliBrite Controller to a 12 VAC Transformer

The following diagram shows how to connect the IntelilBrite LED lights to a 120 VAC wall outlet using a 12 Volt transformer.

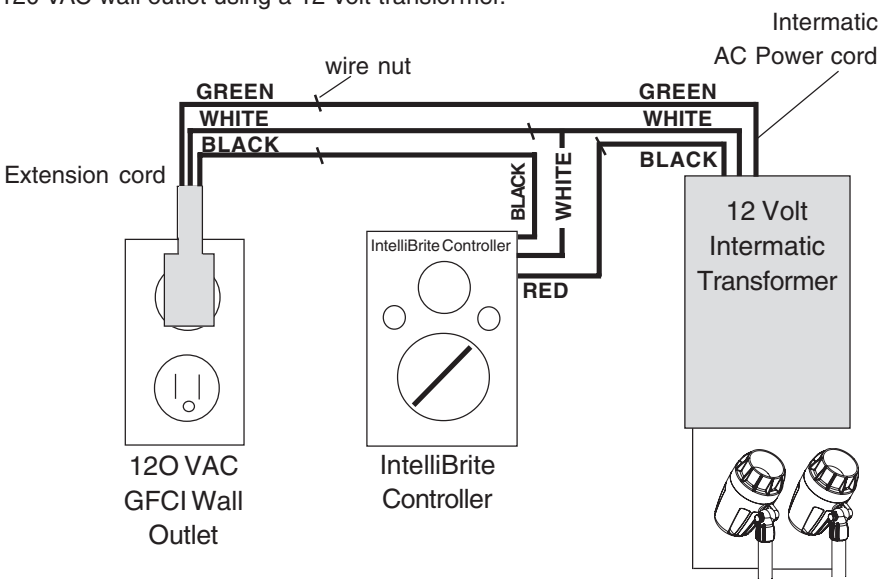

WARNINGS AND IMPORTANT SAFETY PRECAUTIONS

IMPORTANT NOTICE

Attention Installer: This manual contains important information about the installation, operation and safe use of this product. This information should be given to the owner and/or operator of this equipment. When installing and using this electrical equipment, basic safety precautions should always be followed, including the following:

DANGER **IMPORTANT SAFETY INSTRUCTIONS PERTAINING TO A RISK OF FIRE, ELECTRIC SHOCK, OR INJURY TO PERSONS. READ AND FOLLOW ALL INSTRUCTIONS**.

WARNING **DANGER! RISK OF ELECTRIC SHOCK, WHICH CAN RESULT IN SERIOUS INJURY OR DEATH.** Before attempting installation or service, ensure that all power to the circuit supplying power to the system is disconnected/ turned off at the circuit breaker.

Grounding (earth bonding) is required. The IntelliBrite Controller should be installed by a qualified professional and grounded.

CAUTION **Read Safety Precautions and Important Instructions. Before attempting any electrical wiring, be sure to read and follow Safety Instructions. Wiring should only be performed by a qualified professional.**

Before installing this product, read and follow all warning notices and instructions which are included. Failure to follow safety warnings and instructions can result in severe injury, death, or property damage. Call (800) 831-7133 for additional free copies of these instructions.

Do not use this product to control an automatic pool cover. Swimmers may become entrapped underneath the cover.

WARNINGS AND IMPORTANT SAFETY PRECAUTIONS

Be sure the pool electrical system conforms with all requirements of the National Electrical Code (NEC), and all local codes and ordinances. A licensed or certified electrician must install the electrical system to meet or exceed those requirements before the IntelliBrite Controller is installed. The electrician should also consult the local building department regarding local codes. Some of the NEC requirements are listed below:

- The IntelliBrite Controller must be installed by a qualified electrician, according to the National Electrical Code (including article 680) or Canadian Electrical Code (including section 68) and, local code requirements. For Canadian installations, supply circuit must be protected by a ground fault circuit interrupter.
- The IntellilBrite Controller must be provided with a fail-proof ground as required by NEC, Article 680 and any applicable local codes For Canadian installations, the supply circuit must be protected by a ground fault circuit interrupter.
- Do not install the IntelliBrite Controller within 5 feet (3 meters for Canadian installations) of any body of water. USE COPPER CONDUCTORS ONLY.
- The IntelliBrite Controller should be mounted at least 1 foot above the water and ground level.
- Do not exceed the maximum ratings of individual components, wiring devices, and current carrying capacity of conductors.
- For grounding and bonding the IntelliBrite Controller and the installation, refer to section 680 of the National Electrical Code or section 68 of the Canadian Electrical Code.
- The lighting circuit must have a Ground Fault Circuit Interrupter (GFCI), and an appropriately rated circuit breaker.
- The light fixture and all metal items within five (5) feet of the pool must be properly electrically bonded.
- The IntelliBrite Controller must be properly electrically bonded and grounded.
- Do not submerge the IntelliBrite Controller.
- Do not connect two or more IntelliBrite Controller together.

Installing the IntelliBrite Controller in the Outlet box

The IntelliBrite Controller mounts onto a standard outlet box (22.5 cubic inches minimum). See page 3 for outlet box specifications.

After wiring the IntelliBrite Controller, check all wiring connections before mounting the controller into the outlet box.

To install the IntelliBrite Controller:

1. Neatly arrange the wires in the back of the outlet box.
2. Align the Controller with the screw holes of the outlet box. Secure the Controller to the outlet box with the two (2) retaining screws.
3. Close the front door of the Controller.

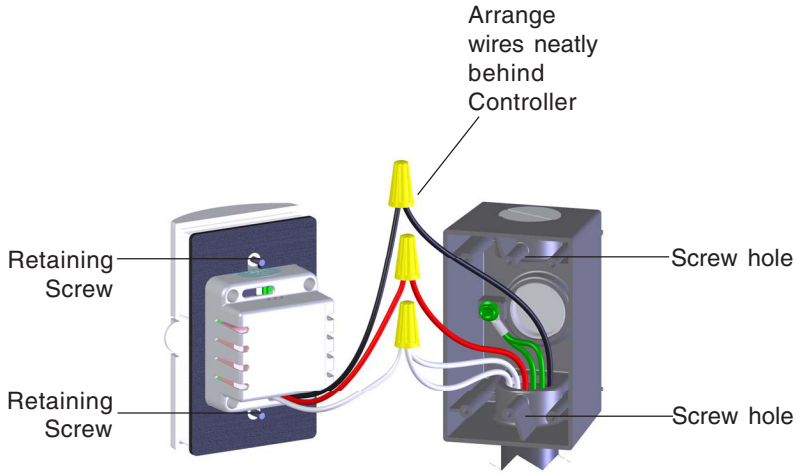

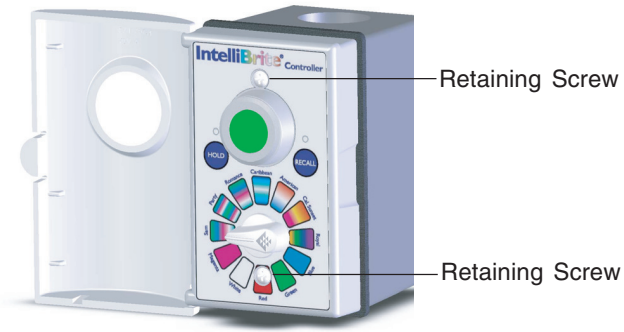

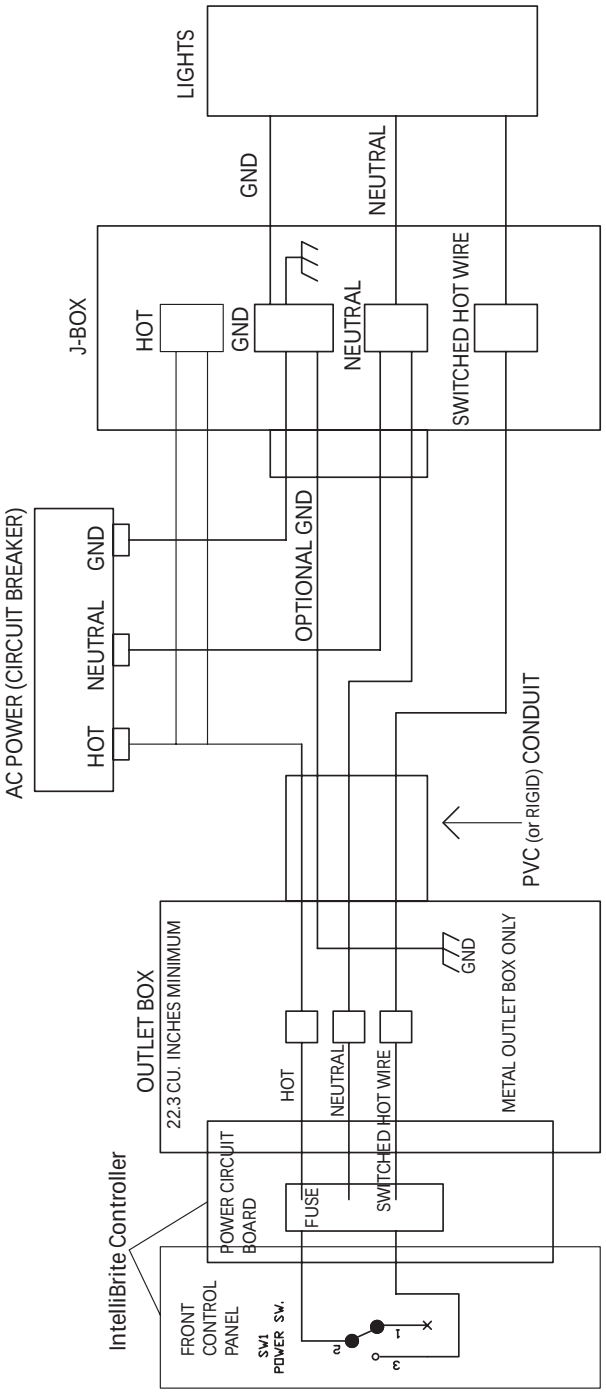

IntelliBrite Controller System Wiring Diagram

Contents

IntelliBrite Controller Overview 1
Controls and Buttons 1
Selecting a Light Show or Fixed Color 2
Hold and Recall Feature 2
Powering on the IntelliBrite light(s) 3
Troubleshooting 3
Outlet Box Specifications 3
Installing an Outlet box for the IntelliBrite Controller 4
Wiring an IntelliBrite Controller to IntelliBrite LED Lights 5
12 VAC IntelliBrite LED Landscape Lights 5
IntelliBrite Controller System Wiring Diagram 7
Installing the IntelliBrite Controller in the Outlet box 8
Wiring IntelliBrite Landscape LED Lights 9

IntelliBrite Controller kit contents

The following items are included in the IntelliBrite Controller kit:

- IntelliBrite Controller, P/N 600054
- Gasket, P/N 619763
- Knob, P/N 690026
- Door, P/N 690027
- Screw kit, P/N 619764
- Installation and User's Guide (this manual)

Note: Outlet box purchased separately (see page 3)

Technical Support

Sanford, North Carolina (8 A.M. to 5 P.M. ET)
Moorpark, California (8 A.M. to 5 P.M. PT)
Phone: (800) 831-7133 - Fax: (800) 284-4151

Related manuals - Download the IntelliBrite LED Pool Light Installation and User's Guide (P/N 619675) at:
http://www.http://www.pentairpool.com/pdfs/IntelliBritePoolOM.pdf

IntelliBrite Controller Overview

The IntelliBrite™ Controller provides complete control of Pentair Water Pool and Spa® IntelliBrite underwater LED (light-emitting diode) lights, and IntelliBrite LED landscape lights. It's easy to select a lighting feature, just dial in any one of the pre-programmed color light shows or fixed colors. Using the Hold and Recall buttons you can also create endless unique lighting effects. The IntelliBrite Controller can control individual or multiple IntelliBrite LED lights. Multiple IntelliBrite LED lights can be connected via a junction box to an IntelliBrite Controller so that all lights can be switched on and off together.

IntelliBrite LED lights are fully compatible with Pentair IntelliTouch® and EasyTouch® automation system. For more information about using IntelliBrite lights with IntelliTouch systems, refer to the IntelliTouch User's Guide (P/N 520102) and the EasyTouch User's Guide (P/N 520584).

⚠WARNING The IntelliBrite controller is a 120 VAC device, **DO NOT** connect 12 VAC IntellilBrite pool/spa LED lights or IntelliBrite LED landscape lights directly to the IntelliBrite controller, use an appropriate step down transformer between the controller and lights. For more information see page 5 - 9.

Controls and Buttons

The IntelliBrite Controller controls, buttons and LEDs are shown below:

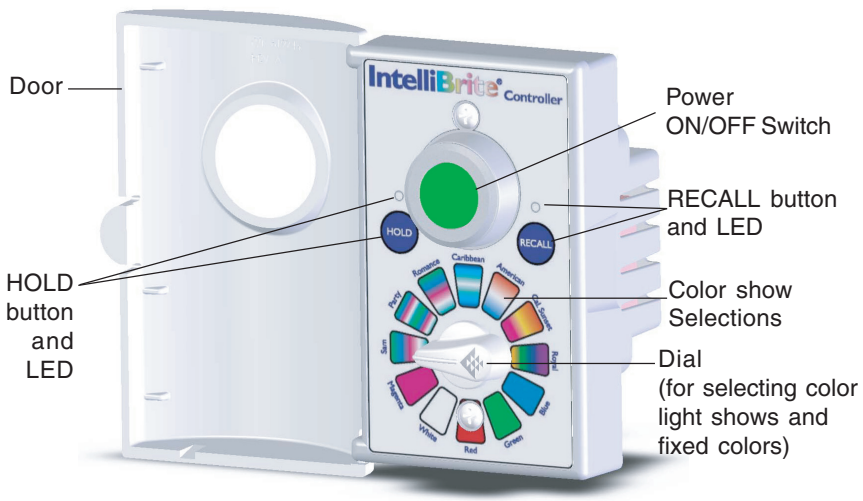

IntelliBrite Controller

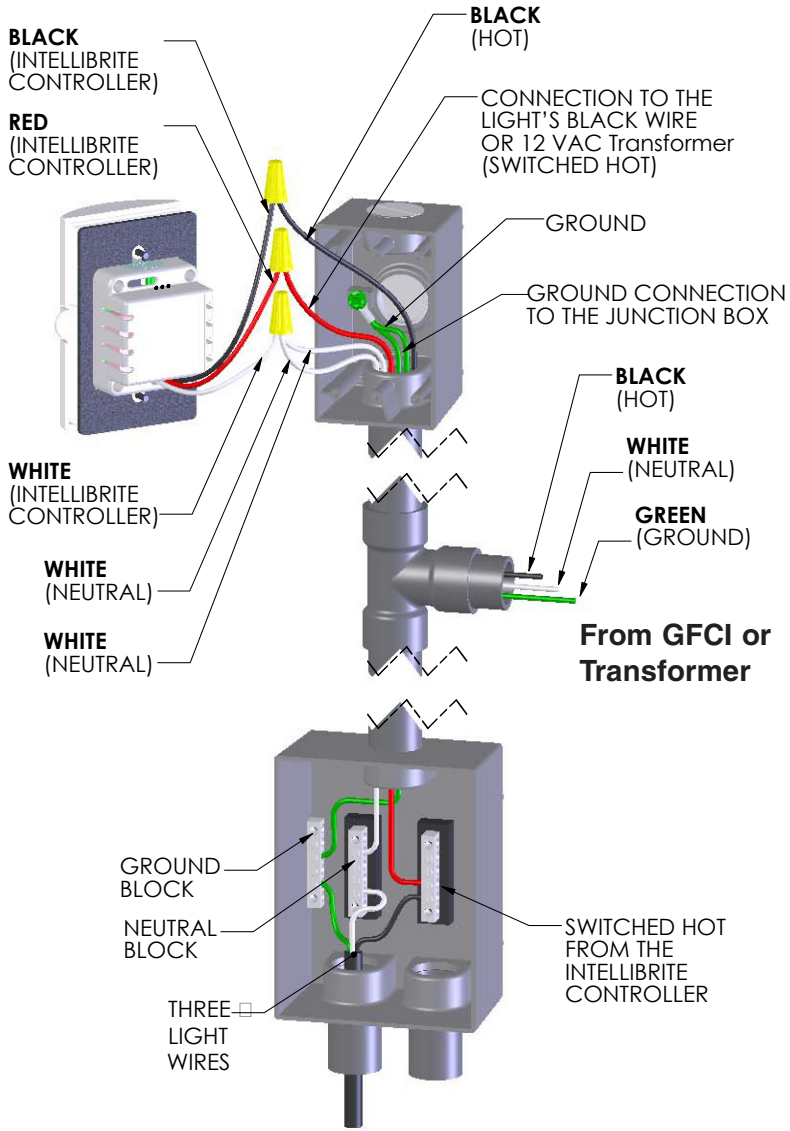

Wiring Diagram
(from Light to Junction Box and GFCI or Transformer)

IMPORTANT! When installing 12 VAC IntelliBrite LED and Landscape lights, connect the lights to the **secondary 12 VAC output** of the step down transformer, then connect the IntelliBrite controller to the **120 VAC primary input** of the step down transformer.

Wiring an IntelliBrite Controller to IntelliBrite LED Lights

Maximum wattage when using multiple lights with controller

When using multiple IntelliBrite LED lights, the total allowable light wattage is 300 Watts maximum. The following example combination of IntelliBrite LED lights can be connected to the IntelliBrite Controller:

- Two (2) IntelliBrite LED pool lights (each light 70 Watt maximum)
- One (1) IntelliBrite LED spa light (40 Watt maximum)
- Eight (8) Landscape LED lights (each light 15 Watt maximum)

DANGER

RISK OF ELECTRICAL SHOCK OR ELECTROCUTION

TURN power OFF at circuit breaker - Always disconnect power to the pool light at the circuit breaker before servicing the light. Failure to do so could result in death or serious injury to installer, service person, pool users, or others due to electrical shock.

To wire multiple 120 Volt IntelliBrite LED Lights to an IntelliBrite Controller:

1. Route the IntelliBrite LED Light cord and the three wires (**white, green and black**) from the GFCI, up through the conduit opening, and into the outlet box.
2. Strip the ends of the three light conductors, and the three GFCI wires. *Note: Use underwater lights with water resistant cord only.*
3. Using the ground screw in the outlet box, secure the **green** ground wire from the light, and the GFCI to the back of the outlet box.
4. Connect the **red** wire from the Controller, to the **red** wire, which is attached to the **black** wire of the light at the junction box.
5. Connect the **white** wire from the Controller to the **white** wire from the light cord, and the white wire from the GFCI (neutral).
6. After the wiring has been completed and checked, proceed to “Installing the Controller in the Outlet Box” on page 10.

12 VAC IntelliBrite LED and Landscape Lights

IMPORTANT! When installing 12 VAC IntelliBrite LED and Landscape lights, connect the lights to the **secondary 12 VAC output** of the step down transformer, then connect the IntelliBrite controller to the **120 VAC primary input** of the step down transformer.

Selecting a Light Show or Fixed Color

Note: *When the IntelliBrite LED light(s) are powered on, a white light will momentarily illuminate, followed by the selected color, unless the HOLD or RECALL feature was previously enabled.*

To select a color light show mode or fixed color mode, rotate the dial so that it points to the desired selection.

The color mode selections are described below starting clockwise from the 9 o’clock position:

Light Show Mode

- **SAm Mode:** Cycles through white, magenta, blue and green colors (emulates the Pentair Water Pool and Spa SAm® light).
- **Party Mode:** Rapid color changing building energy and excitement.
- **Romance Mode:** Slow color transitions creating a mesmerizing and calming effect.
- **Caribbean Mode:** Transitions between a variety of blues and greens.
- **American Mode:** Patriotic red, white and blue transition.
- **California Sunset Mode:** Dramatic transitions of orange, red and magenta tones.
- **Royal Mode:** Richer, deeper color tones.

Fixed Colors

- **Blue:** Fixed color.
- **Green:** Fixed color.
- **Red:** Fixed color.
- **White:** Fixed color.
- **Magenta:** Fixed color.

Hold and Recall Feature

Note: *When the IntelliBrite LED light(s) are powered on, a white light will momentarily illuminate, followed by the selected color, unless the HOLD or RECALL feature was previously enabled.*

Hold button/LED: Press this button (LED on) to capture and save a color effect while displaying one of the light show modes. When the button is pressed, the LED will be on, indicating that the color effect is captured.

Recall Button/LED: Use this button (LED on) to activate the last saved color effect. When the button is pressed, the LED will be on, indicating that the color effect is being displayed.

Powering on the IntelliBrite light(s)

When the IntelliBrite LED light is powered on, a momentarily white light will illuminate, followed by the dial selected color.

Troubleshooting

Use the following tips to help to resolve problems that might occur while operating the IntelliBrite Controller.

Problem	Cause/Action
Both of the LEDs are flashing.	The IntelliBrite Controller has detected that the load has exceeded the maximum allowable wattage or the output is shorted out 1. Switch of the IntelliBrite Controller OFF. Remove excessive load or short. 2. Press the IntelliBrite Controller power switch to power on the unit. Ensure that the LEDs are no longer flashing.
The light will not illuminate. Light does not function properly.	Check the ground fault wiring and reset if necessary. Check the light wiring connection to the junction box at the pool side and to the main circuit breaker. Be sure that there is proper AC power applied to the light.

Outlet Box Specifications (purchased separately)

The IntelliBrite Controller requires a standard outlet box which is purchased separately. The outlet box must meet the following specifications:

- Outlet box type: **22.5 cubic inches (minimum)** - Suitable for wet locations with UL/CSA approval listings. Check the inside of outlet box for specification label.
- A minimum of one 3/4” steel conduit.

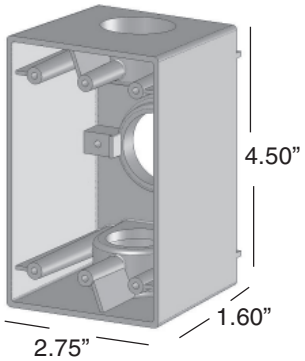

Outlet Box (22.5 cubic inches minimum)

Installing an Outlet box for the IntelliBrite Controller

The IntelliBrite Controller mounts onto a standard outlet box (22.5 cubic inches). See page 3 for outlet box specifications.

RISK OF ELECTRICAL SHOCK OR ELECTROCUTION

TURN power OFF at circuit breaker - Always disconnect power to the pool light at the circuit breaker before servicing the light. Failure to do so could result in death or serious injury to installer, service person, pool users, or others due to electrical shock.

To install the outlet box:

1. Position the IntelliBrite Controller and outlet box to meet National Electrical Code requirements, and to prevent hazard to personnel.
2. Run conduit from the IntelliBrite light niche to the junction box.

   Note: *The outlet box must be located a minimum distance of five (5) feet measured horizontally from the inside wall of the pool and not less than one (1) foot above the maximum pool water level measured to the top of the outlet box.*
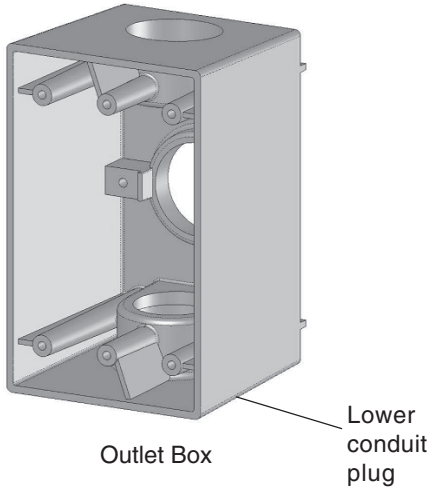
3. Remove the lower conduit plug from the outlet box.
4. Mount the outlet box onto the conduit.